NEST360 BIOMEDICAL ENGINEERING DESIGN COMPETITION 2026

AETERNA

A Multi-Analyte Microneedle Biosensor for Continuous Maternal & Neonatal Metabolic Monitoring

Team Aeterna omni3 | Addis Ababa University

Yubo Lemecha • Mahlet Getinet • Tsoriya Tesfaye

Project Pitch — September 2026

THE CORE PROBLEM

Why Traditional CGMs Fail Rural Clinics

Devices like Dexcom or FreeStyle Libre carry three engineering and clinical flaws that block deployment in resource-constrained maternal and pediatric settings.

1

Needle Trauma & Low Compliance

Long, intimidating 5–8 mm steel introducer needles drive a sensor filament deep into subcutaneous tissue — causing needle phobia and distress in infants and pregnant mothers.

2

Diagnostic Blindspots

Standard CGMs measure glucose only. Health workers stay blind to concurrent lethal threats such as neonatal sepsis and severe gestational dehydration.

3

Material & Economic Waste

Single-use plastic applicators embed heavy steel springs, discarded after one injection — driving up cost and creating unsustainable biohazard waste.

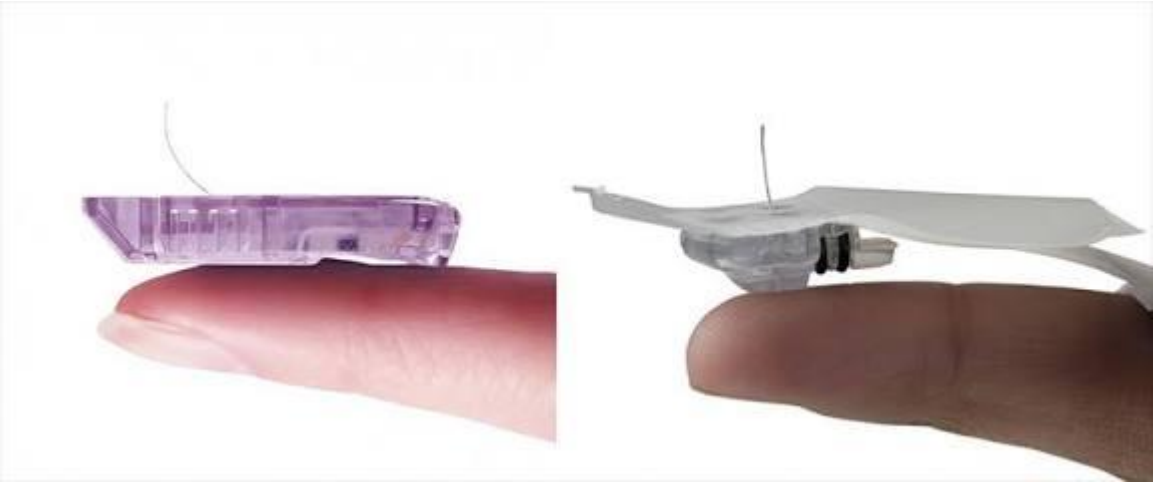


DexcomG7
G7
DexcomG7
REF STP-AT-001
LOT 12345678901234
04-15-2020
04-15-2021
dexcom



WHY IT MATTERS NOW

The evidence behind the urgency

~12,000

maternal deaths per year in Ethiopia; obstetric complications cause 85% of them

Ethiopian Ministry of Health; Tessema et al., 2025

2×

higher neonatal mortality hazard for rural-born infants vs. urban-born infants

Shiferaw et al., Frontiers in Pediatrics, 2022

94%

of hypoglycemic infants in one cohort showed white-matter brain abnormalities on MRI

AJNR; PMC narrative review, 2024

3M

infants affected by neonatal sepsis globally each year, with an 11–19% fatality rate

Scientific Reports, 2023; PMC, 2024

SYSTEM ARCHITECTURE

The “Lab-on-a-Patch” Signal Path

A multiplexed dermal biosensor monitors Glucose, Lactate, and Ketones simultaneously — continuously — from a single patch.

Skin Surface — Zones G / L / K

Microneedle mosaic array contacts interstitial fluid

↓

Layered Enzyme Functionalization

GOx · LOx · HBDH coatings isolate each analyte signal

↓

3-Channel Micro-Potentiostat

Electronic signal isolation across all zones

↓

Bluetooth Transmitter

Digitizes & wirelessly beams the metrics

↓

Mobile Health App / Clinic Dashboard

Real-time trend arrows for clinicians

THREE ANALYTES, ONE PATCH

G

Glucose

Glucose Oxidase (GOx)

L

Lactate

Lactate Oxidase (LOx)

K

Ketones

Hydroxybutyrate Dehydrogenase

THE FLUID TARGET

Interstitial Fluid, Not Blood

The sensor never enters a blood vessel. It targets the interstitial fluid (ISF) ocean in the viable epidermis and upper dermis — the same fluid layer that glucose, lactate, and ketones diffuse into from capillary blood.

5–15

MINUTE PHYSIOLOGICAL LAG, CONSTANT 24/7

The mobile software compensates using predictive velocity / trend algorithms (trend arrows) to show real-time directionality to clinicians, 24 hours a day.

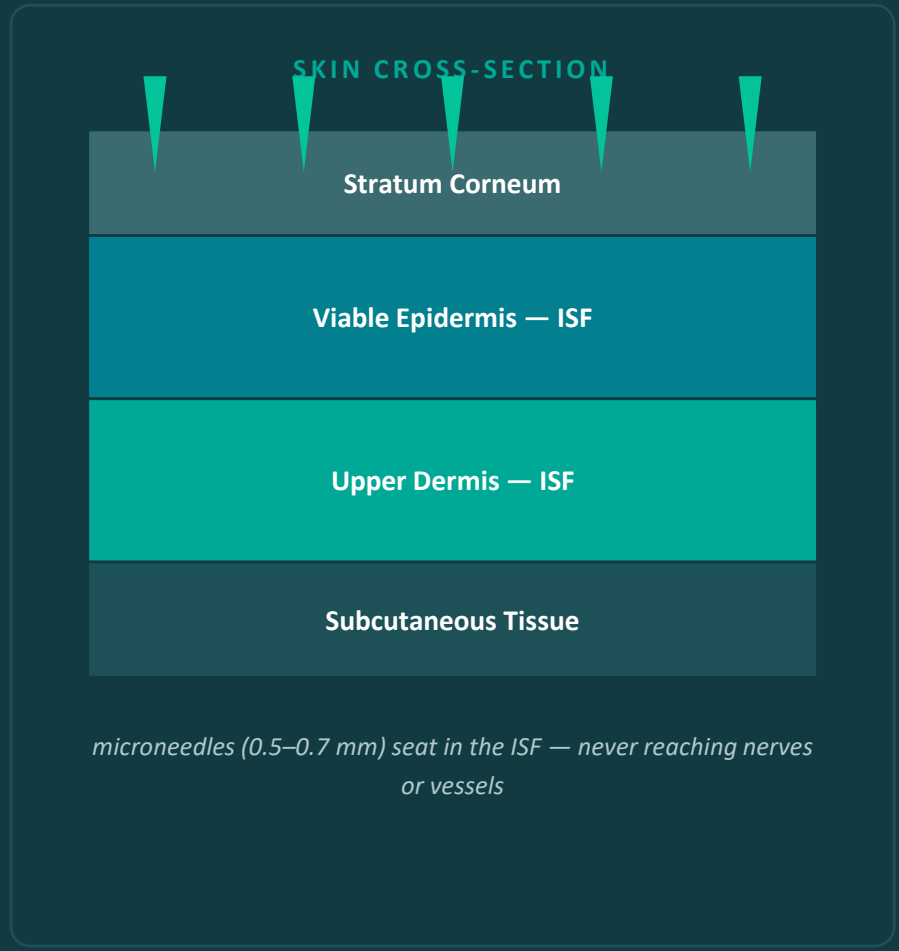

microneedles (0.5–0.7 mm) seat in the ISF — never reaching nerves or vessels

THE ELECTRONIC POD

What Sits On Top of the Patch

A sealed, waterproof (IP68) polycarbonate disc houses four components.

1

Gold Contact Pads

Spring-loaded metallic contacts touch the needle array base, transferring delicate nano-ampere currents cleanly without cross-contamination.

2

Multi-Channel Potentiostat

A micro-chip (ADuCM355-class) acts as an electronic traffic cop — stable voltages across all three zones, no signal bleed.

3

ADC + Bluetooth LE SoC

Digitizes the chemical currents and wirelessly beams the metrics to a smartphone or clinic dashboard.

4

Coin-Cell Power Supply

Lightweight battery engineered to run the low-energy circuits continuously for a 10–14-day wear cycle.

Signal Amplification

Grouping 100–200 needles per zone amplifies tiny individual currents (pico-amperes) into a clean, combined nano-ampere signal — easily read by the potentiostat.

picoamps

single needle

→

nanoamps

full zone array

Structural Redundancy

If several needles in a zone are blocked by skin tissue, the remaining needles preserve signal integrity — the reading holds steady.

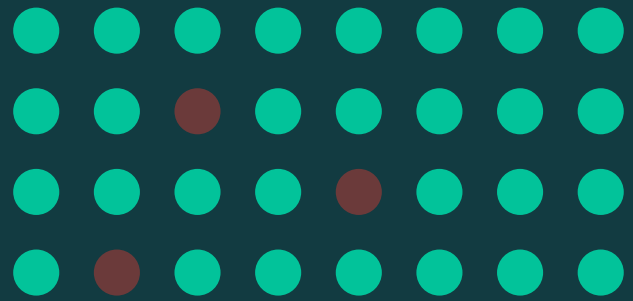

Blocked needles — zone signal unaffected

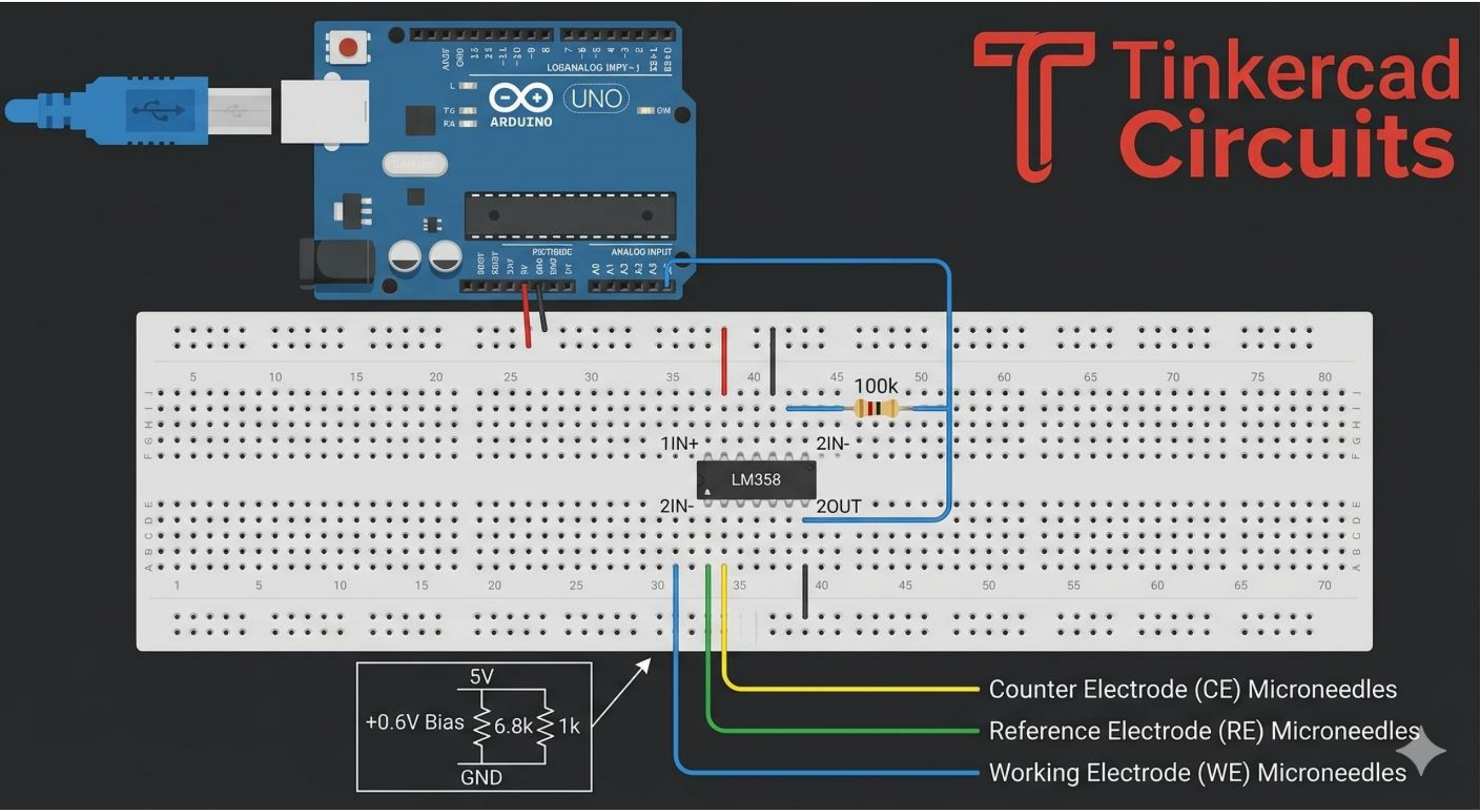
Tinkercad Circuits
UNO
ARDUINO
ANALOG INPUT
100k
1IN+
2IN-
LM358
2IN-
2OUT
5V
+0.6V Bias
6.8k
1k
GND
Counter Electrode (CE) Microneedles
Reference Electrode (RE) Microneedles
Working Electrode (WE) Microneedles

MECHANICAL REDESIGN

The “Eco-Load” Applicator

A two-part modular ecosystem replaces the single-use injector, splitting cost-driving hardware from disposable contact.

REUSABLE MECHANICAL APPLICATOR

Internal stainless steel firing spring + push-button trigger — permanent, retained by the clinic or mother, never thrown away.

DISPOSABLE CARTRIDGE INSERT

Minimal plastic shell housing only the microneedle patch + electronic pod. Snaps in, leaves no mechanical waste behind.

– 75%

disposable plastic volume vs. commercial applicators

The Reusable Handle

Durable, sterilizable ABS plastic injector body. High-tension steel spring & cocking lever built in permanently.

The Disposable Cartridge

Sterile plastic tray housing only the patch + pod. Snaps into the handle base; reduces disposable plastic volume by over 75%.

Magnetic Linear-Guided Alignment

Neodymium magnets in the firing piston align with contacts on the patch back — a straight, uniform stroke every time.



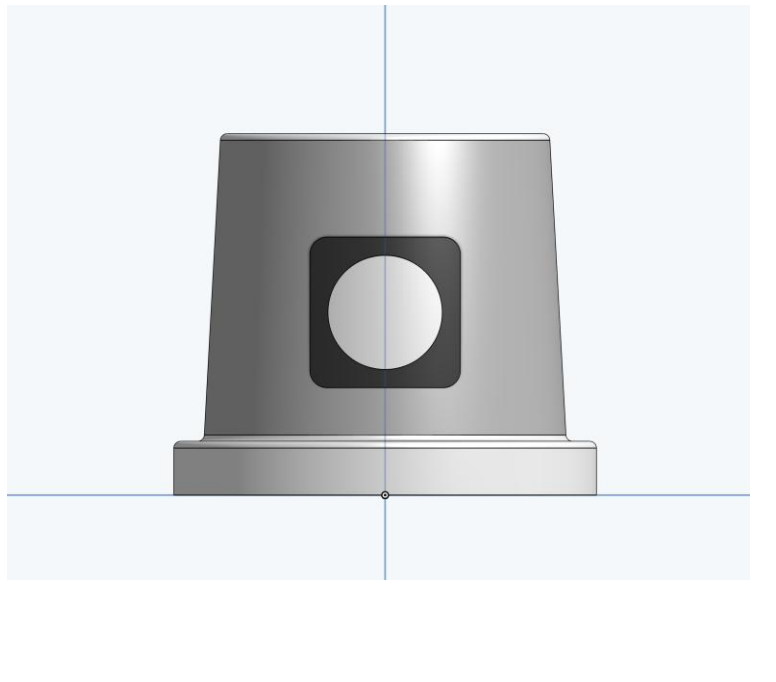

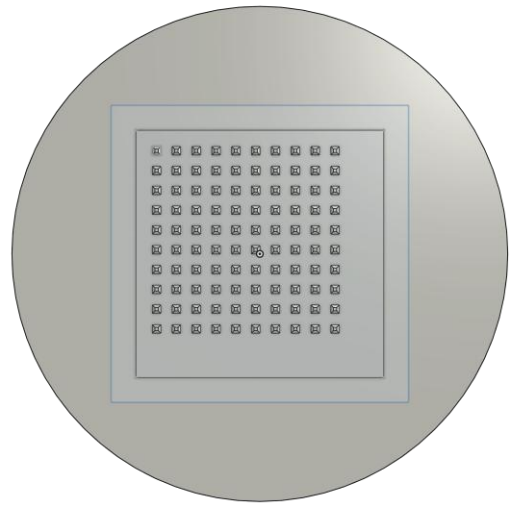

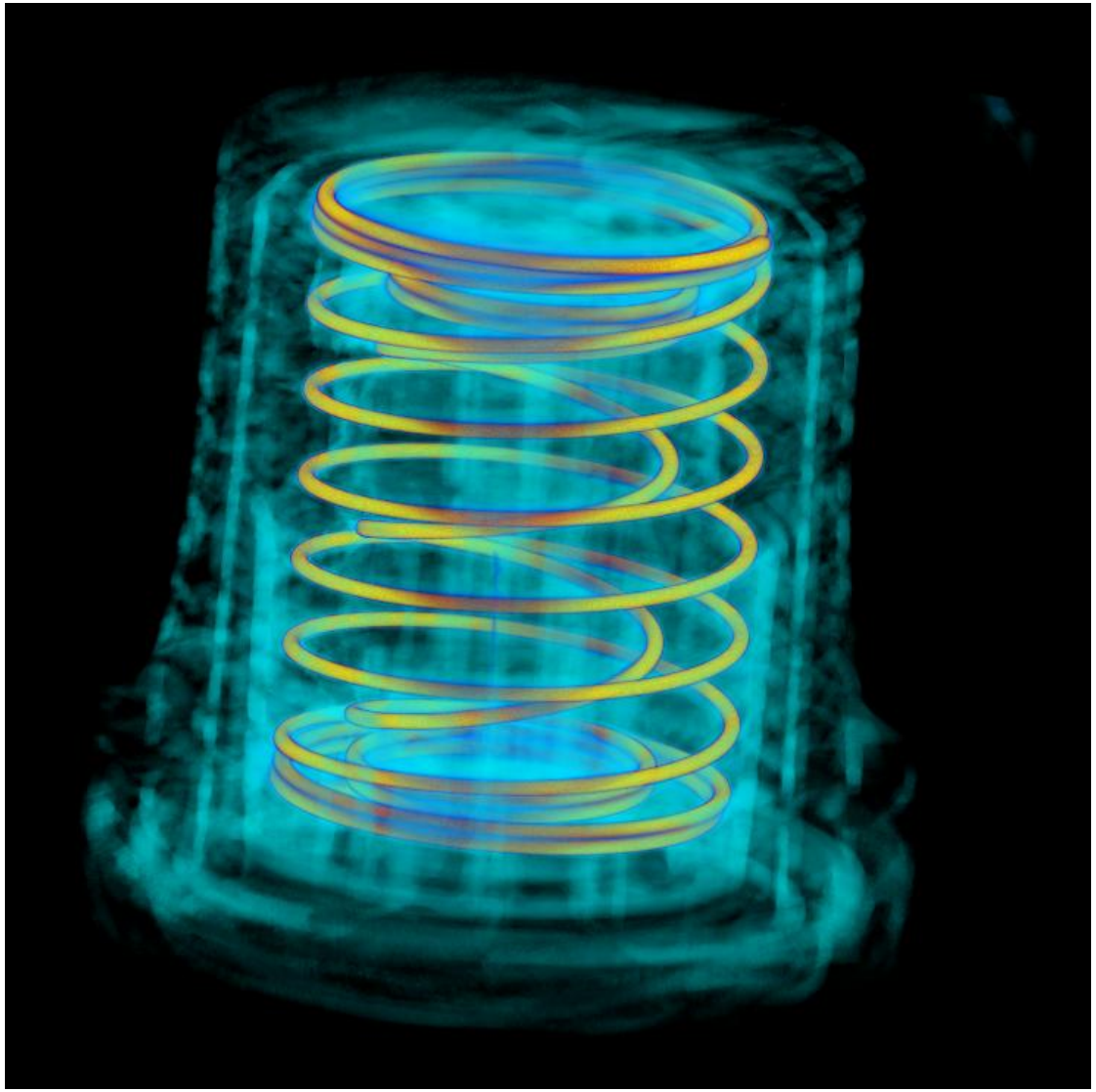

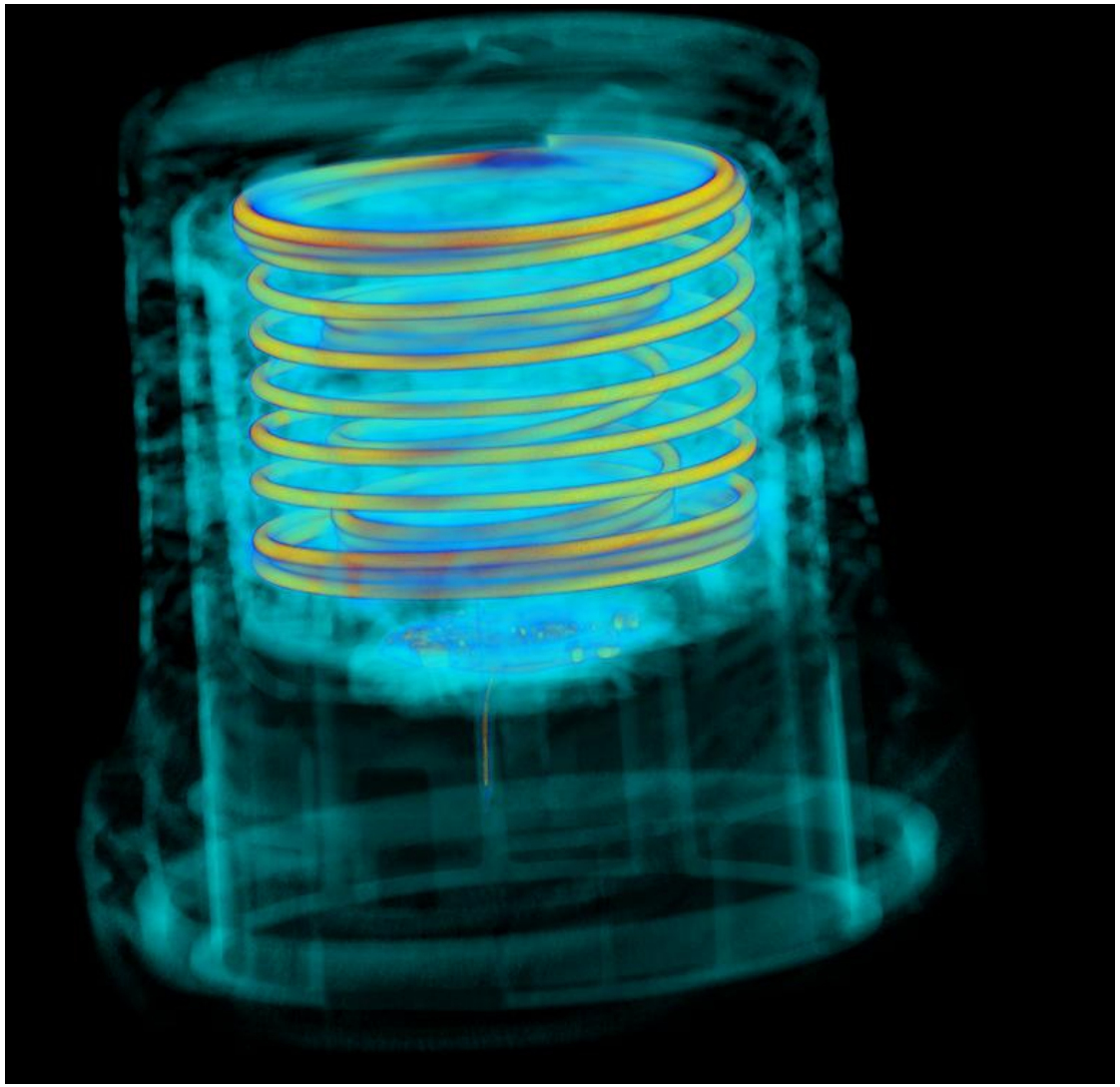

THE BENEFITS

What improves once it's in use

Patient Comfort & Compliance

Painless application improves wear compliance in pregnant women and infants over multi-day monitoring.

Earlier Clinical Insight

Multi-analyte data flags sepsis, preeclampsia, and dehydration risk that glucose-only CGMs would miss.

~75% Less Disposable Waste

Reusable applicator + minimal-plastic cartridge cuts disposable plastic volume vs. single-use CGMs.

Built for Low-Resource Settings

Designed for low-connectivity rural health posts, not dependent on reliable infrastructure.

Reduced Workload for Staff

Continuous BLE trend data reduces reliance on repeated manual blood draws between visits.

Local Manufacturing Potential

Applicator and cartridge components are 3D-printable, favorable for local production in Ethiopia.

ADDRESSING THE RISKS

Open challenges — and our plan

We're at concept stage: no experimental biosensor data has been collected yet. Here's what remains, and how we're approaching it.

CHALLENGE	OUR APPROACH
Enzyme signal stability & cross-talk across the three sensing zones over 10–14 days	Dedicated benchtop validation and biofouling-mitigation testing beyond the current phase.
Sterilization protocol for the reusable applicator between patients	To be defined in the next phase — practical for rural health-post settings without added cost.
No finalized per-unit cost model yet	Detailed cost-per-unit analysis planned once design and materials are finalized.
Specialized biosensor components (enzymes, potentiostat) not yet locally sourced	Staged development: start with locally available parts, source specialized components as we scale.

APPLICATOR FEATURES

Gentler by Design

Because 0.7 mm microneedles need very little force to seat, the mechanism is rebuilt around precision and silence.

STANDARD CGM APPLICATORS

- ✕ Heavy, violent impact springs
- ✕ Loud mechanical “pop” on firing
- ✕ Free-hand alignment — needles can shear or bend
- ✕ Frightening for pediatric patients

ECO-LOAD APPLICATOR

- ✓ Dampened, soft-compression spring
- ✓ Completely silent application
- ✓ Magnetic linear-guided alignment — perfectly straight stroke
- ✓ Gentle, low-force, non-frightening

NEXT STEPS

From concept to clinic

1. Build the Phase 2 prototype: 3D-printed applicator + ESP32/Arduino BLE demo with a mobile dashboard
2. Run benchtop validation of enzyme stability, biofouling resistance, and sterilization protocol
3. Complete a per-unit cost model and pursue a small-scale clinical pilot at a rural Ethiopian health post

IMPACT SUMMARY

What This Changes for Rural Clinics

3

Analytes tracked continuously & simultaneously

0.5–0.7mm

Needle height — painless, bloodless, nerve-safe

10–14

Day continuous wear cycle

>75%

Reduction in disposable plastic waste

From a single-analyte, single-use, high-trauma device to a multiplexed, mostly-reusable, painless patch.

Diagnostic blindspots close — lactate and ketone channels flag neonatal sepsis, preeclampsia, and severe dehydration alongside glucose. Mechanical waste and per-unit cost drop as the reusable handle absorbs the expensive components, leaving only a minimal disposable cartridge behind. And the experience itself changes: a silent, low-force, magnetically-aligned application replaces a frightening mechanical “pop,” raising the odds that mothers and infants actually keep the device on.

THANK YOU
ANY QUESTIONS?